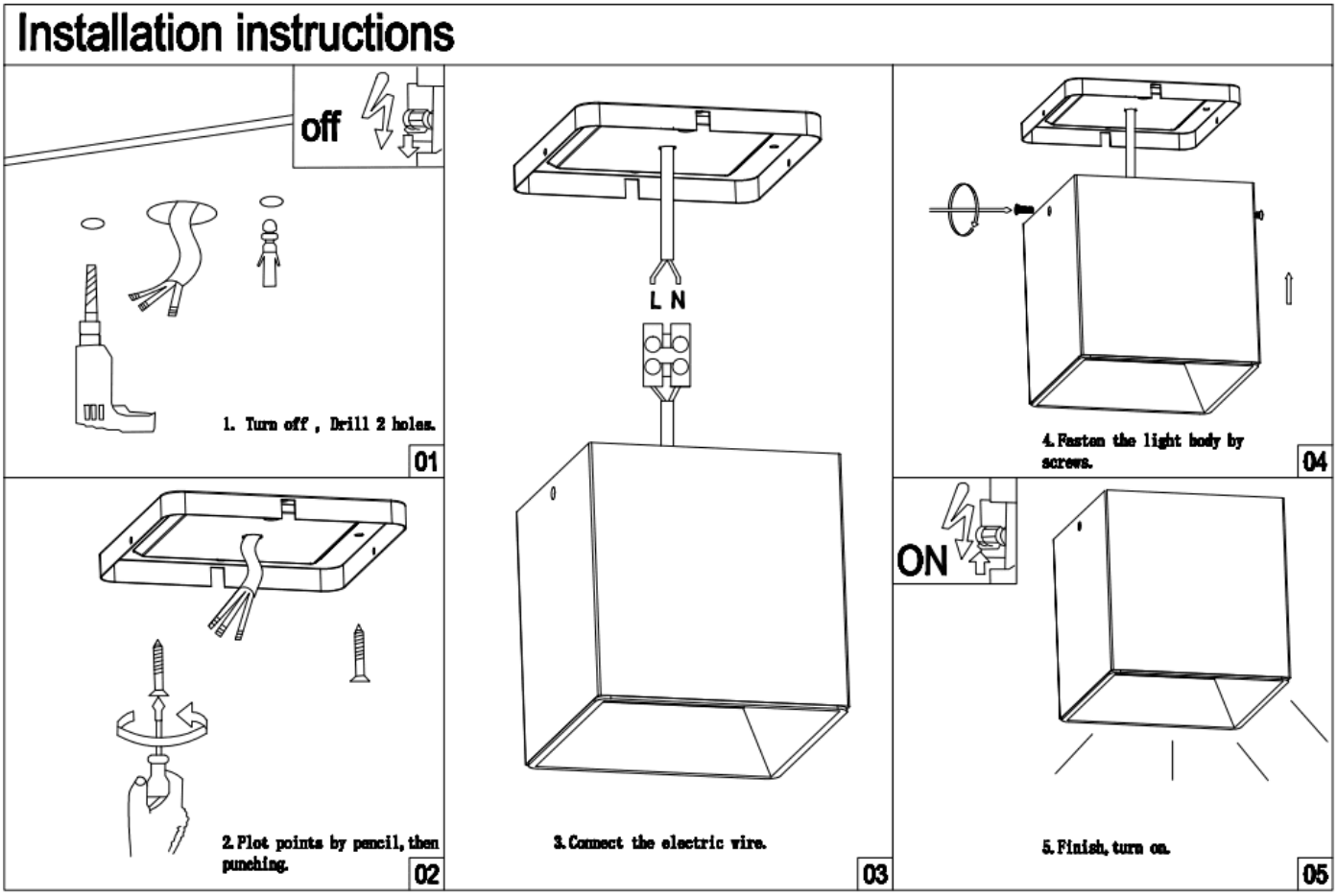
Installation instructions
off
1. Turn off , Drill 2 holes.
01
2. Plot points by pencil, then punching.
02
L N
3. Connect the electric wire.
03
4. Fasten the light body by screws.
04
ON
5. Finish, turn on.
05